SUSPENSION, FRONT STABILIZER BAR - Z26SPD92AN/AH/BN/BH (C750136)

2026 RZR - RZR PRO S ULTIMATE (R01) - Z26SPD92AN/AH/BN/BH

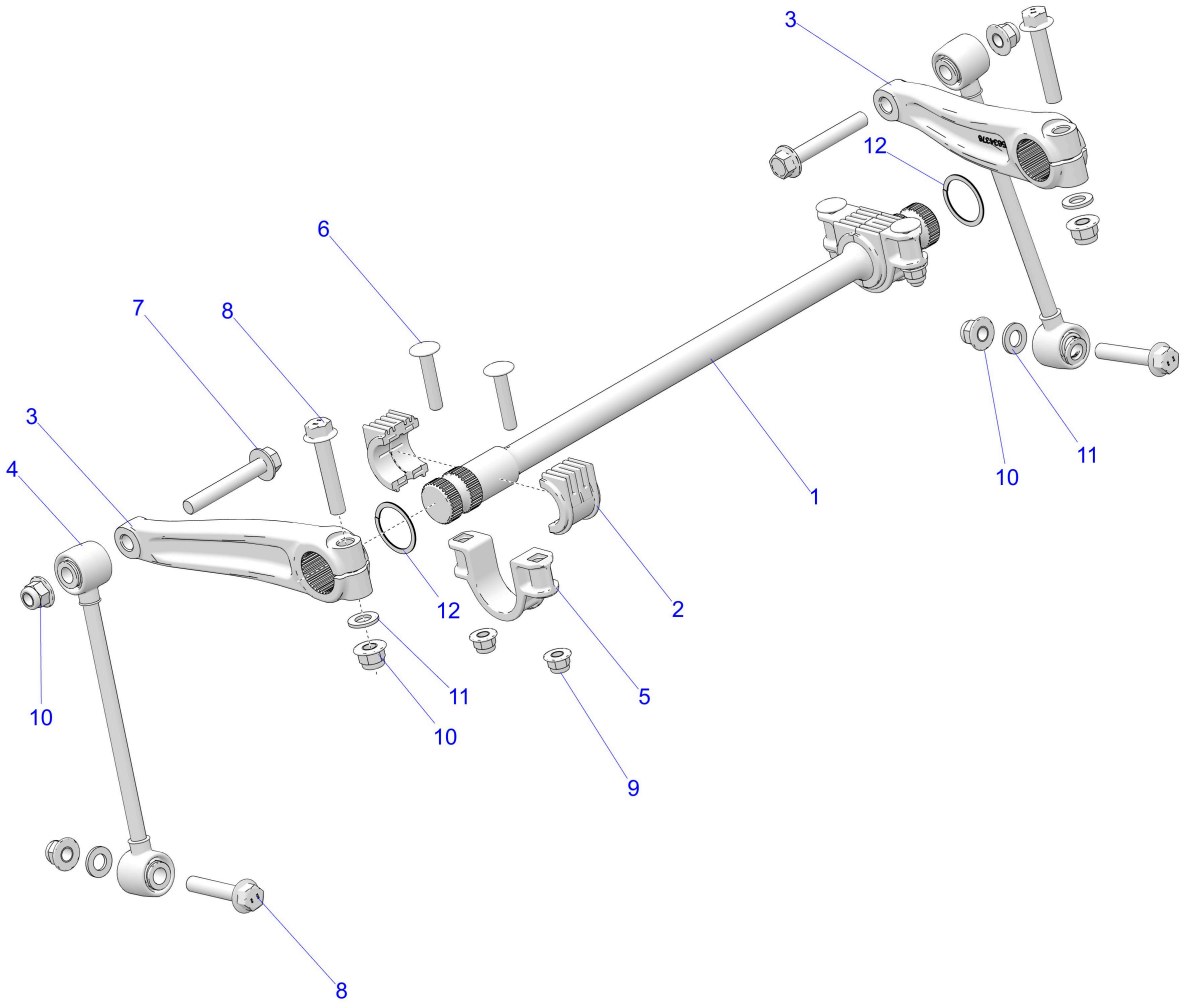

© 2023 Polaris Industries Inc. C750136

Reference #	Part#	Description	Quantity
1	5347034	BAR-STABILIZER,18MM	1
2	5456496	BUSHING-SWAY BAR	4
3	5639788	ARM-SWAY BAR FRONT	2
4	1544329	ASM-LINKAGE,STABILIZER BAR	2
5	5634706	BRKT-CAST,SWAY BAR	2
6	7519073	SCR-RHCAR-M10X1.25X50 8.8 ZOD	4
7	7521334-80	SCR-HXFL-M12X1.75X80 10.9 ZFB	2
8	7521334-65	SCR-HXFL-M12X1.75X65 10.9 ZFB	4
9	7548029	NUT-HXFL-M10X1.5 8 ZTB NYL	4
10	7548030	NUT-HXFL-M12X1.75 8 ZTB NYL	6
11	7557236	WSHR-FLAT-M12X2.5 ZTB	4
12	7558725	SPRING-WASHER	2

Copyright 1996-2026 Polaris Industries U.S.A All rights reserved.